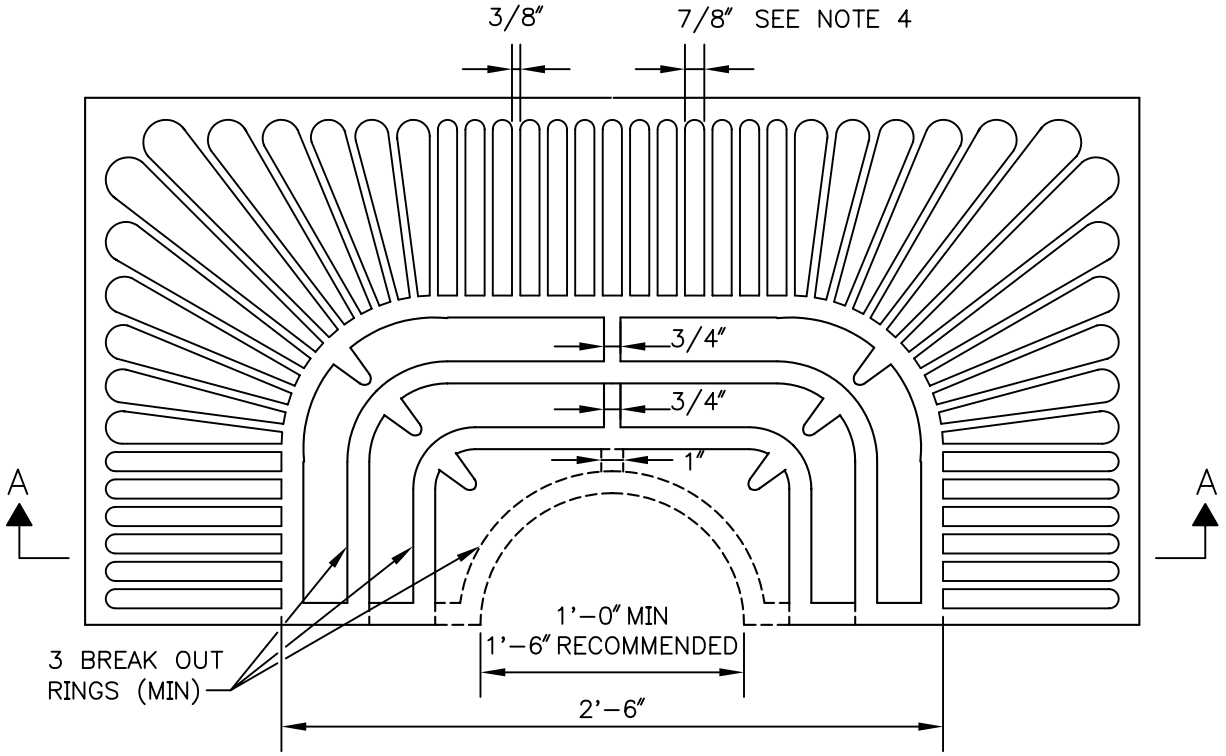

PLAN
1 OF 2 PIECES

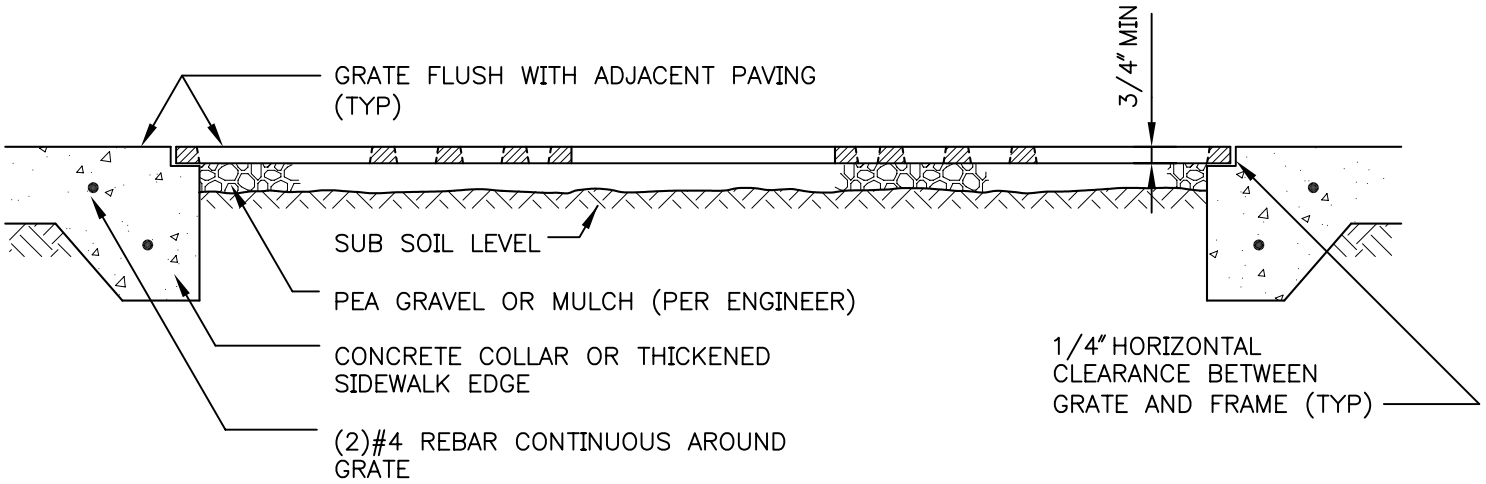

SECTION A–A

NOTES:

1. MAXIMUM WEIGHT OF EACH TREE GRATE CASTING SHALL BE 110 LBS.
2. TREE GRATE CONSISTS OF 2 PIECES MIN
3. TREE GRATE SHALL BE MADE OF GRAY IRON
4. GRATE DESIGN AS SHOWN IS NOT INTENDED TO MEET ADA ACCESSIBLITY REQUIREMENTS FOR INSTALLATION IN AREAS WITH LIMITED SIDEWALK WIDTH. INSTALLATIONS REQUIRING ADA APPROVED GRATES SHALL HAVE OPENINGS OF 3/8" OR LESS.

City of Seattle **Department of Parks & Recreation**	**TREE GRATE DETAIL** **STD. DETAIL NO. 32 94 43**